kolpa·san by KOLPA WATERFALL

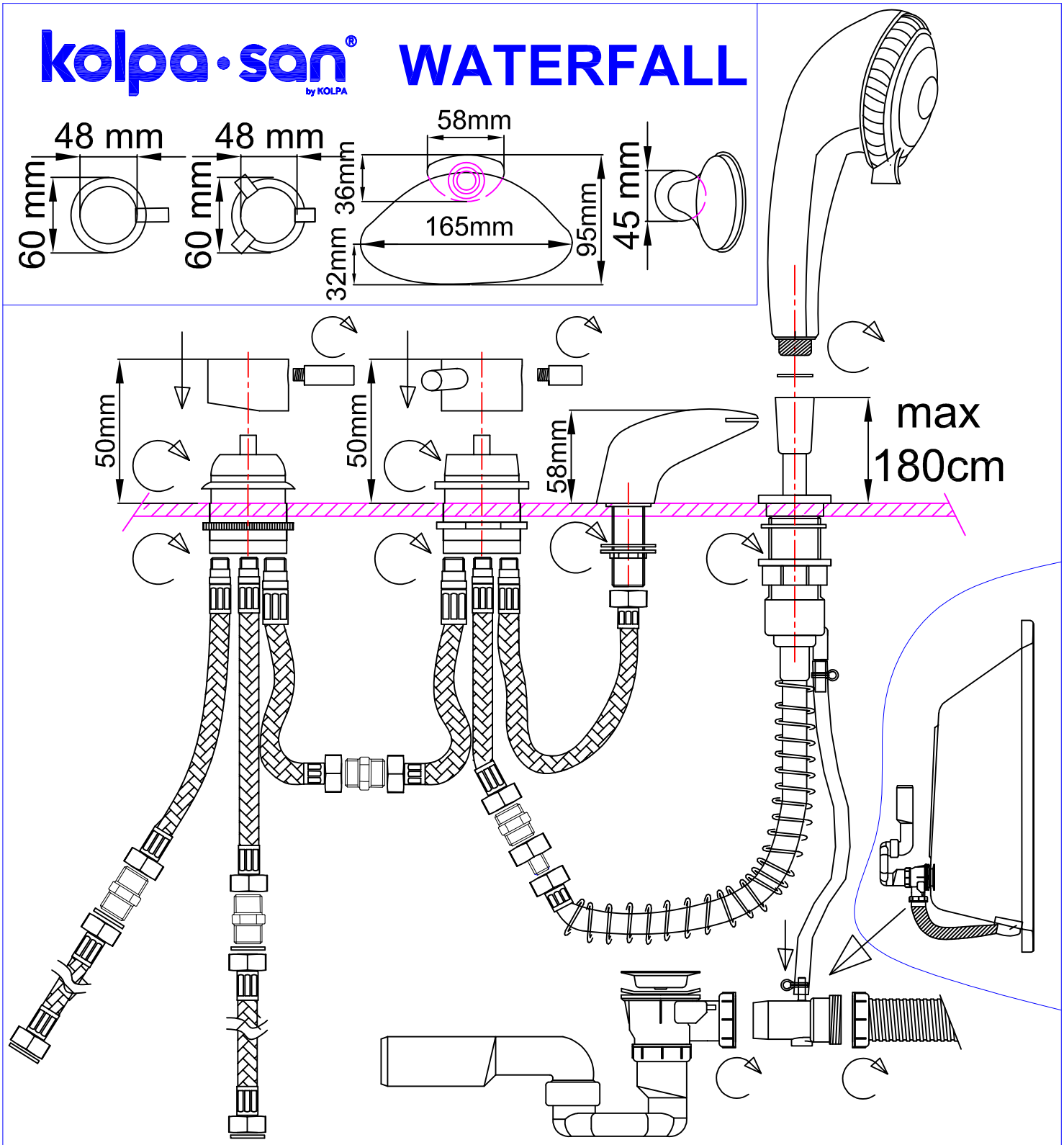
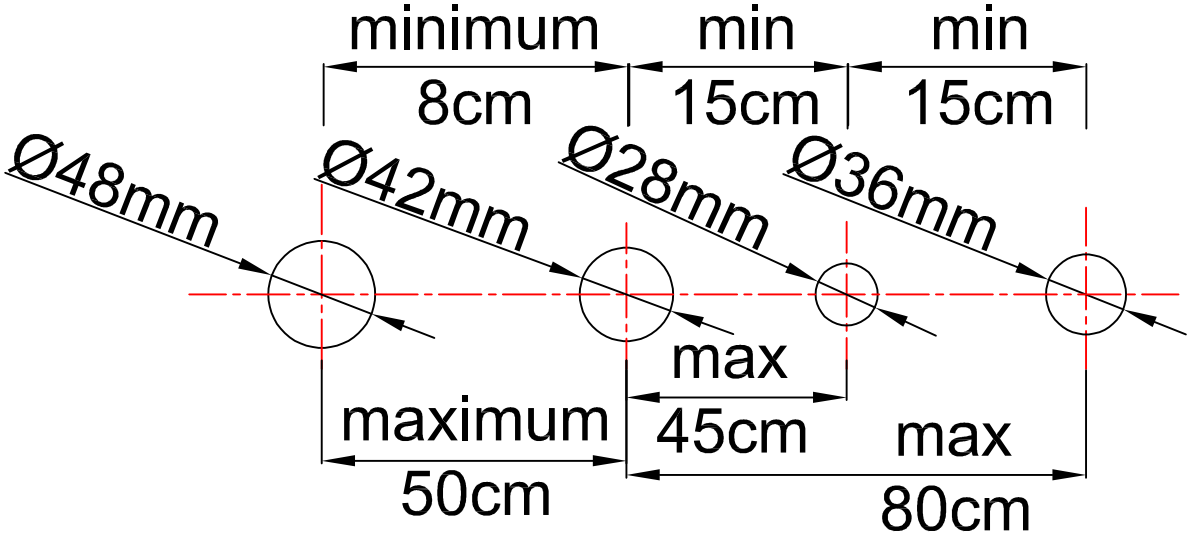
IZVRTINE / DRILL HOLES / LÖCHER / RUPE